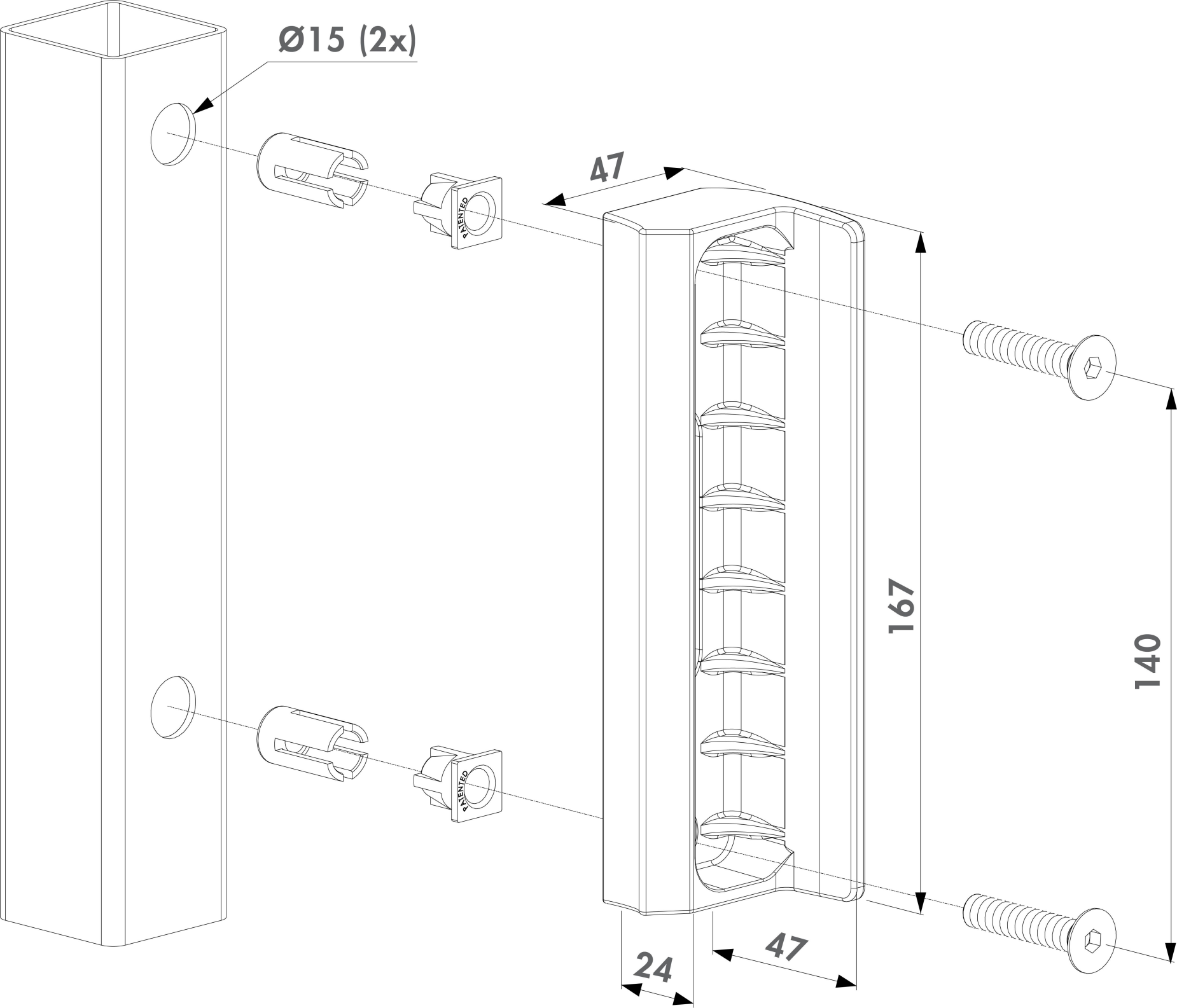
Ø15 (2x)
47
PATENTED
PATENTED
167
140
24
47